WA-31 FI42

TECHNICAL DATA

Anodising	10 colours
Packing	sleeve material
Purpose	aluminium columns with spigot endings ø60x180
Application	for mounting on SAL aluminium columns with ø60x130 / 180 mm spigot
Finish	grinded, anodised aluminium
Material	anodised aluminium alloy
CE	the extension arm with the pole make a set - for extension arms, the Declaration of Performance applies to the pole on which extension arms is mounted

Carbon footprint (kg of CO_2 eq.)
22.72 kg

Al | 10 | RAL

TABLE OF TYPES

Code	Symbol	Purpose	Number of arms	Unit volume	Effective projected area	Luminaire mounting diameter	Net weight
471031/C...	WA-31 fi42	aluminium columns with spigot endings ø60x180	1	0.022 m³	0.213 m²	ø42 mm	8.7 kg

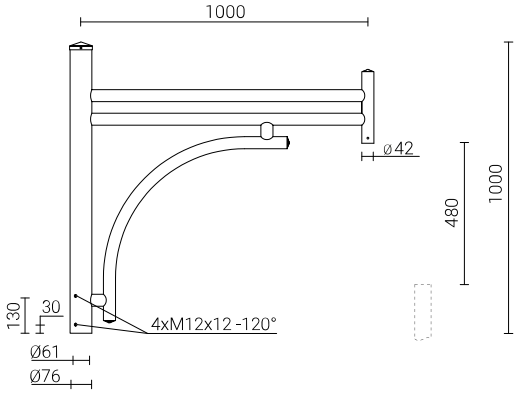

Zakład Produkcji Sprzętu Oświetleniowego „ROSA" Sp. z o.o.
43-109 Tychy, ul. Strefowa 1 tel. +48 32 73 88 901
www.rosa.pl