# KA-5

## TECHNICAL DATA

| | |
|---|---|
| **Anodising** | 10 colours |
| **Purpose** | OP, OPA-1 |
| **Application** | Aluminium wall brackets for wall mounting |
| **Material** | anodised aluminium alloy |

Carbon footprint (kg of $CO_2$ eq.)
**9.91 kg**

CE | Al | 10 | RAL

## TABLE OF TYPES

| Code | Symbol | Purpose | Number of arms | Unit volume | Luminaire mounting diameter | Net weight |
|---|---|---|---|---|---|---|
| 478050/C... | KA-5 | OP, OPA-1 | 1 | 0.02 m³ | ø60 mm | 2.5 kg |

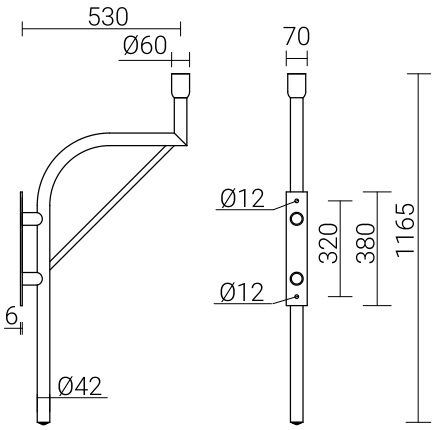




Zakład Produkcji Sprzętu Oświetleniowego „ROSA” Sp. z o.o.
43-109 Tychy, ul. Strefowa 1 tel. +48 32 73 88 901
**www.rosa.pl**