CUDDLE II LED NEMA

TECHNICAL DATA

Application	motorways and expressway, urban roads, residential roads (internal), pedestrians, parkings
Assembly	on extension arms with ⌀ 60 x 100 mm ending
Colour	inox / black
Ingress protection	IP 66 for the optical part and the driver
Optical system	PMMA optics, interchangeable LED module, PC-UV diffuser
Material	anodised aluminium alloy
Operating temperature range	from -40°C to +40°C
Expected useful lifetime	L90B10 - 100 000 h
CRI	>70
Input voltage frequency	50/60Hz
Power factor	≥0.95
Number of LED	24 - (48 W, 60 W, 72 W); 64 - (96 W, 120 W, 144 W, 192 W)
Control system	The luminaire can be connected to an external control system via a 5-pin socket compatible with ANSI C136.41 (optional installation of a 7-pin socket). Standard communication interface: DALI (optional 1-10V analog signal support).

IK08 | 220-240V AC | -40° +40° | 10kV | AI | DALI

TABLE OF TYPES

Code	Symbol	LED power	Luminaire power consumption	LED forward current	Colour temperature (CCT)	LEDs luminous flux[1]	Luminaire luminous flux[1]	Luminous efficacy[1]	Unit volume	Net weight
2224033/1/...[2]	CUDDLE II LED 48 NEMA	48 W	55 W	700 mA	2700 K	8150 lm	6950 lm	126 lm/W	0.024 m³	5.8 kg
2224033/3/...[2]	CUDDLE II LED 48 NEMA	48 W	55 W	700 mA	3500 K	8650 lm	7350 lm	134 lm/W	0.024 m³	5.8 kg
2224033/4/...[2]	CUDDLE II LED 48 NEMA	48 W	55 W	700 mA	4000 K	9150 lm	7800 lm	142 lm/W	0.024 m³	5.8 kg
2224033/6/...[2]	CUDDLE II LED 48 NEMA	48 W	55 W	700 mA	5000 K	9150 lm	7800 lm	142 lm/W	0.024 m³	5.8 kg
2224034/1/...[2]	CUDDLE II LED 60 NEMA	60 W	67 W	830 mA	2700 K	9300 lm	7950 lm	119 lm/W	0.024 m³	5.8 kg
2224034/3/...[2]	CUDDLE II LED 60 NEMA	60 W	67 W	830 mA	3500 K	9850 lm	8400 lm	125 lm/W	0.024 m³	5.8 kg
2224034/4/...[2]	CUDDLE II LED 60 NEMA	60 W	67 W	830 mA	4000 K	10450 lm	8900 lm	133 lm/W	0.024 m³	5.8 kg
2224034/6/...[2]	CUDDLE II LED 60 NEMA	60 W	67 W	830 mA	5000 K	10450 lm	8900 lm	133 lm/W	0.024 m³	5.8 kg
2224035/1/...[2]	CUDDLE II LED 72 NEMA	72 W	79 W	1000 mA	2700 K	10700 lm	9100 lm	115 lm/W	0.024 m³	5.8 kg
2224035/3/...[2]	CUDDLE II LED 72 NEMA	72 W	79 W	1000 mA	3500 K	11350 lm	9700 lm	123 lm/W	0.024 m³	5.8 kg
2224035/4/...[2]	CUDDLE II LED 72 NEMA	72 W	79 W	1000 mA	4000 K	12100 lm	10300 lm	130 lm/W	0.024 m³	5.8 kg
2224035/6/...[2]	CUDDLE II LED 72 NEMA	72 W	79 W	1000 mA	5000 K	12100 lm	10300 lm	130 lm/W	0.024 m³	5.8 kg
2224037/1/...[2]	CUDDLE II LED 96 NEMA	96 W	105 W	500 mA	2700 K	16000 lm	13650 lm	130 lm/W	0.033 m³	8 kg
2224037/3/...[2]	CUDDLE II LED 96 NEMA	96 W	105 W	500 mA	3500 K	16950 lm	14450 lm	138 lm/W	0.033 m³	8 kg
2224037/4/...[2]	CUDDLE II LED 96 NEMA	96 W	105 W	500 mA	4000 K	18000 lm	15350 lm	146 lm/W	0.033 m³	8 kg
2224037/6/...[2]	CUDDLE II LED 96 NEMA	96 W	105 W	500 mA	5000 K	18000 lm	15350 lm	146 lm/W	0.033 m³	8 kg
2224039/1/...[2]	CUDDLE II LED 120 NEMA	120 W	129 W	625 mA	2700 K	19250 lm	16400 lm	127 lm/W	0.033 m³	8 kg
2224039/3/...[2]	CUDDLE II LED 120 NEMA	120 W	129 W	625 mA	3500 K	20500 lm	17450 lm	135 lm/W	0.033 m³	8 kg
2224039/4/...[2]	CUDDLE II LED 120 NEMA	120 W	129 W	625 mA	4000 K	21700 lm	18500 lm	143 lm/W	0.033 m³	8 kg
2224039/6/...[2]	CUDDLE II LED 120 NEMA	120 W	129 W	625 mA	5000 K	21700 lm	18500 lm	143 lm/W	0.033 m³	8 kg
2224041/1/...[2]	CUDDLE II LED 144 NEMA	144 W	154 W	750 mA	2700 K	22350 lm	19050 lm	124 lm/W	0.033 m³	8 kg
2224041/3/...[2]	CUDDLE II LED 144 NEMA	144 W	154 W	750 mA	3500 K	23750 lm	20250 lm	131 lm/W	0.033 m³	8 kg
2224041/4/...[2]	CUDDLE II LED 144 NEMA	144 W	154 W	750 mA	4000 K	25150 lm	21450 lm	139 lm/W	0.033 m³	8 kg
2224041/6/...[2]	CUDDLE II LED 144 NEMA	144 W	154 W	750 mA	5000 K	25150 lm	21450 lm	139 lm/W	0.033 m³	8 kg
2224046/1/...[2]	CUDDLE II LED 192 NEMA	192 W	205 W	1000 mA	2700 K	27850 lm	23750 lm	116 lm/W	0.033 m³	8 kg
2224046/3/...[2]	CUDDLE II LED 192 NEMA	192 W	205 W	1000 mA	3500 K	29600 lm	25250 lm	123 lm/W	0.033 m³	8 kg
2224046/4/...[2]	CUDDLE II LED 192 NEMA	192 W	205 W	1000 mA	4000 K	31350 lm	26700 lm	130 lm/W	0.033 m³	8 kg
2224046/6/...[2]	CUDDLE II LED 192 NEMA	192 W	205 W	1000 mA	5000 K	31350 lm	26700 lm	130 lm/W	0.033 m³	8 kg

1) tolerance +/- 5% due to LEDs accuracy

2) symbol of chosen optical system eg. 2224033/6/T2 is CUDDLE II LED 48 NEMA 5000K with T2 optical system

Zakład Produkcji Sprzętu Oświetleniowego „ROSA" Sp. z o.o.
43-109 Tychy, ul. Strefowa 1 tel. +48 32 73 88 901
www.rosa.pl

CUDDLE II LED NEMA

DIRECTIVES AND STANDARDS

DIRECTIVES: 2014/35/UE (Official Journal of the UE L 96/357 29.03.2014), 2014/30/UE (Official Journal of the UE L 96/79 29.03.2014), 2011/65/UE, 2009/125/EC
STANDARDS: PN-EN IEC 60598-1: 2021-7, PN-EN 60598-2-3: 2006, PN-EN 60529: 2003, PN-EN 62262: 2003, PN-EN 62471:2010, PN-EN 55015: 2019, PN-EN 61547: 2009, PN-EN 61000-3-2: 2019 , PN-EN 61000-3-3: 2013

Lighting parameters presented based on laboratory tests according to IESNA LM-79-19

CHARGING DISCHARGE FROM THE LED LUMINAIRE HOUSING

In order to efficient discharge the electrostatic charge from the housing of LED fitting installed on the pole from dielectric material (non-conductive) one of the following solutions is required:
- functional grounding
- LED luminaire with an additional protection device

TECHNICAL DRAWING

CUDDLE II LED NEMA 48W, 60W, 72W

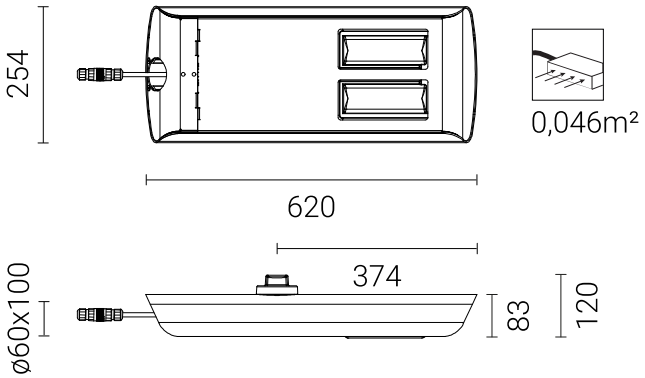

CUDDLE II LED NEMA 96W, 120W, 144W, 192W

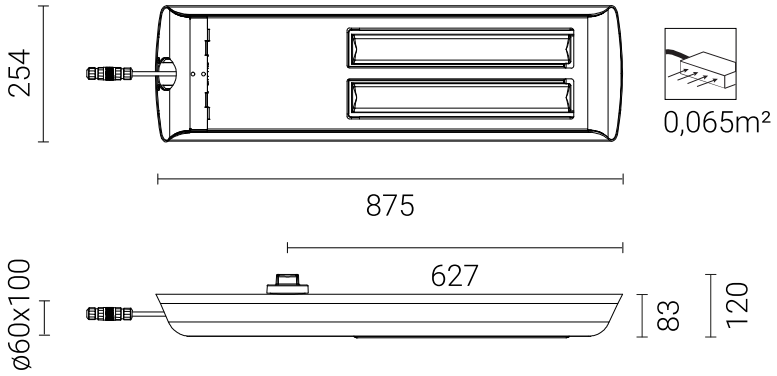

PHOTOMETRIC CURVES

Zakład Produkcji Sprzętu Oświetleniowego „ROSA" Sp. z o.o.
43-109 Tychy, ul. Strefowa 1 tel. +48 32 73 88 901
www.rosa.pl

CUDDLE II LED NEMA

DW

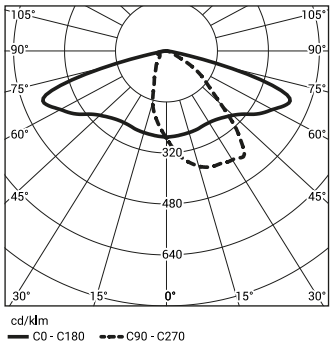

T4

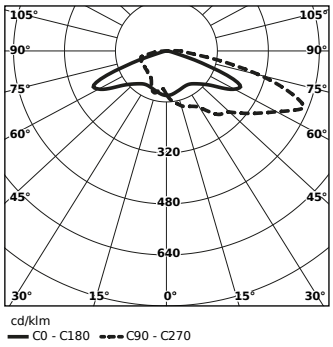

T2

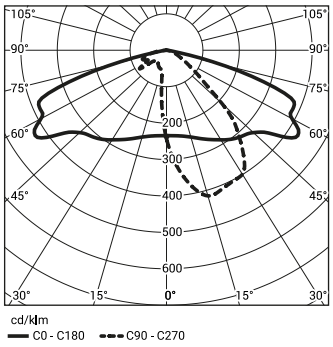

LM

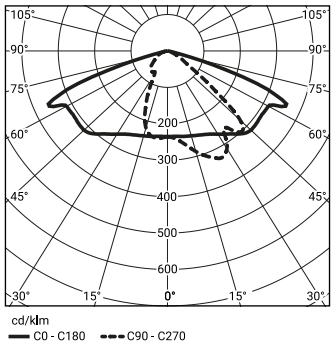

ME

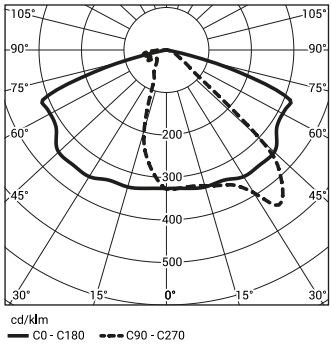

T3

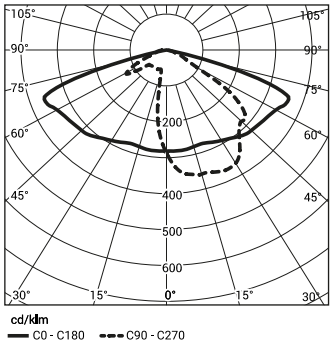

LW

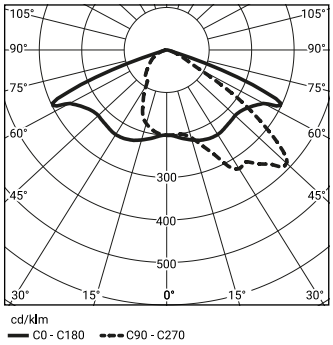

PL

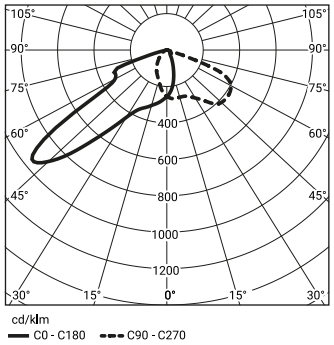

P2

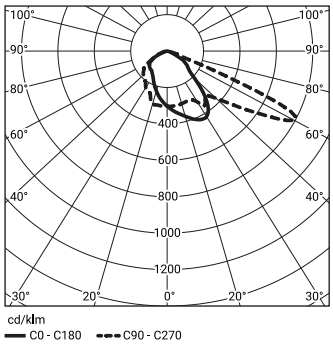

POWER SYSTEM FUNCTIONS

Luminaire in standard has following functions of intelligent power supply:

– Connection to outside control system by DALI interface (operation of analog signal 1-10V as an option),
– Possibility of programming multistage dimming of luminaire, up to 5 intervals in the range of from 10 to 100% of nominal power,
– Temperature protection of LED module (from overheating) in case of unintentional luminaire operation during the,
– Regulation of power / luminous flux – the option of setting another value than the catalogue in the range of 30-100% of nominal one,

ACCETABLE QUANTITY OF LUMINAIRES ON ONE CIRCUIT

Overcurrent switches MCB type B or C

Luminaire	Typ	2A	4A	6A	10A	16A	20A	25A
CUDDLE II LED NEMA 48, 60, 72W	B	1	2	4	6	11	13	17
	C	1	4	6	11	18	22	28
CUDDLE II LED NEMA 96, 120, 144W	B	1	1	3	5	8	12	12
	C	1	3	5	8	13	16	20
CUDDLE II LED NEMA 192W	B	0	1	2	4	8	10	12
	C	1	2	4	6	13	16	18

Fuse – type gG and GL

Luminaire	2A	4A	6A	10A	16A	20A	25A
CUDDLE II LED NEMA 48, 60, 72W	1	2	11	19	30	38	47
CUDDLE II LED NEMA 96, 120, 144W	1	1	6	9	15	19	24
CUDDLE II LED NEMA 192W	0	1	4	7	12	15	19

Zakład Produkcji Sprzętu Oświetleniowego „ROSA” Sp. z o.o.
43-109 Tychy, ul. Strefowa 1 tel. +48 32 73 88 901
www.rosa.pl