RING 2 LED

TECHNICAL DATA

Application	surrounding office buildings, parks, pedestrians, parkings
Assembly	depending on the type of head: A - pole top mounted or on extension arms with ø 60 x 50 mm, B - pole top mounted with ø 60 x 180 mm
Ingress protection	IP 66
Optical system	PMMA optics, interchangeable LED module
Material	cap – formed aluminium sheet diffuser - tempered glass luminaire body - aluminum alloy, anodized
Operating temperature range	from -40°C to +40°C
Expected useful lifetime	L90B10 - 100 000 h
CRI	>70
Input voltage frequency	50/60Hz
Power factor	≥0.95
Number of LED	16 - (24 W, 36 W, 48 W) 32 - 72 W
Control system	Luminaire has the possibility to connect to an external control system via DALI interface (optionally via analog signal 1- 10V).

IP66 IK08 220-240V AC -40° +40° 10kV AI DALI

TABLE OF TYPES

Code	Symbol	LED power	Luminaire power consumption	LED forward current	Colour temperature (CCT)	LEDs luminous flux[1]	Luminaire luminous flux[1]	Luminous efficacy[1]	Unit volume	Net weight with mounting head type 'A' / 'B'
212130/.../1/...²/C...	RING 2 LED 24	24 W	28 W	500 mA	2700 K	4050 lm	3050 lm	109 lm/W	0.08 m³	6,6 kg / 7,1 kg
212130/.../3/...²/C...	RING 2 LED 24	24 W	28 W	500 mA	3500 K	4300 lm	3250 lm	116 lm/W	0.08 m³	6,6 kg / 7,1 kg
212130/.../4/...²/C...	RING 2 LED 24	24 W	28 W	500 mA	4000 K	4550 lm	3450 lm	123 lm/W	0.08 m³	6,6 kg / 7,1 kg
212130/.../6/...²/C...	RING 2 LED 24	24 W	28 W	500 mA	5000 K	4550 lm	3450 lm	123 lm/W	0.08 m³	6,6 kg / 7,1 kg
212132/.../1/...²/C...	RING 2 LED 36	36 W	40 W	750 mA	2700 K	5750 lm	4350 lm	109 lm/W	0.08 m³	6,6 kg / 7,1 kg
212132/.../3/...²/C...	RING 2 LED 36	36 W	40 W	750 mA	3500 K	6100 lm	4600 lm	115 lm/W	0.08 m³	6,6 kg / 7,1 kg
212132/.../4/...²/C...	RING 2 LED 36	36 W	40 W	750 mA	4000 K	6500 lm	4900 lm	123 lm/W	0.08 m³	6,6 kg / 7,1 kg
212132/.../6/...²/C...	RING 2 LED 36	36 W	40 W	750 mA	5000 K	6500 lm	4900 lm	123 lm/W	0.08 m³	6,6 kg / 7,1 kg
212133/.../1/...²/C...	RING 2 LED 48	48 W	55 W	1000 mA	2700 K	7300 lm	5550 lm	101 lm/W	0.08 m³	6,6 kg / 7,1 kg
212133/.../3/...²/C...	RING 2 LED 48	48 W	55 W	1000 mA	3500 K	7750 lm	5850 lm	106 lm/W	0.08 m³	6,6 kg / 7,1 kg
212133/.../4/...²/C...	RING 2 LED 48	48 W	55 W	1000 mA	4000 K	8200 lm	6200 lm	113 lm/W	0.08 m³	6,6 kg / 7,1 kg
212133/.../6/...²/C...	RING 2 LED 48	48 W	55 W	1000 mA	5000 K	8200 lm	6200 lm	113 lm/W	0.08 m³	6,6 kg / 7,1 kg
212135/.../1/...²/C...	RING 2 LED 72	72 W	79 W	750 mA	2700 K	11520 lm	8750 lm	111 lm/W	0.08 m³	6,6 kg / 7,1 kg
212135/.../3/...²/C...	RING 2 LED 72	72 W	79 W	750 mA	3500 K	12250 lm	9300 lm	118 lm/W	0.08 m³	6,6 kg / 7,1 kg
212135/.../4/...²/C...	RING 2 LED 72	72 W	79 W	750 mA	4000 K	12950 lm	9800 lm	124 lm/W	0.08 m³	6,6 kg / 7,1 kg
212135/.../6/...²/C...	RING 2 LED 72	72 W	79 W	750 mA	5000 K	12950 lm	9800 lm	124 lm/W	0.08 m³	6,6 kg / 7,1 kg

1) tolerance +/- 5% due to LEDs accuracy
2) exemplary product code 212130/A/6/T4/C35 is RING 2 LED 24W 5000K luminaire, where /A/ is the mounting head type 'A', /T4/ is the T4 optical system, /C35 is the anodizing color of the C35 luminaire black
3) the weight of the luminaire with the head type 'A' is 6.6 kg / with the head type 'B' is 7.1 kg
4) ENEC/ENEC+ certificate does not apply to luminaires from 212135 code

DIRECTIVES AND STANDARDS

DIRECTIVES: 2014/35/UE (Official Journal of the UE L 96/357 29.03.2014), 2014/30/UE (Official Journal of the UE L 96/79 29.03.2014), 2011/65/UE, 2009/125/EC
STANDARDS: PN-EN IEC 60598-1: 2021-7, PN-EN 60598-2-3: 2006, PN-EN 60529: 2003, PN-EN 62262: 2003, PN-EN 62471:2010, PN-EN 55015: 2019, PN-EN 61547: 2009, PN-EN 61000-3-2: 2019 , PN-EN 61000-3-3: 2013, PN-EN 62722-2-1 (tq=25°C)

Lighting parameters presented based on laboratory tests according to IESNA LM-79-19

CHARGING DISCHARGE FROM THE LED LUMINAIRE HOUSING

In order to efficient discharge the electrostatic charge from the housing of LED fitting installed on the pole from dielectric material (non-conductive) one of the following solutions is required:
- functional grounding
- LED luminaire with an additional protection device

Zakład Produkcji Sprzętu Oświetleniowego „ROSA" Sp. z o.o.
43-109 Tychy, ul. Strefowa 1 tel. +48 32 73 88 901
www.rosa.pl

RING 2 LED

TECHNICAL DRAWING

RING 2 LED 'A'

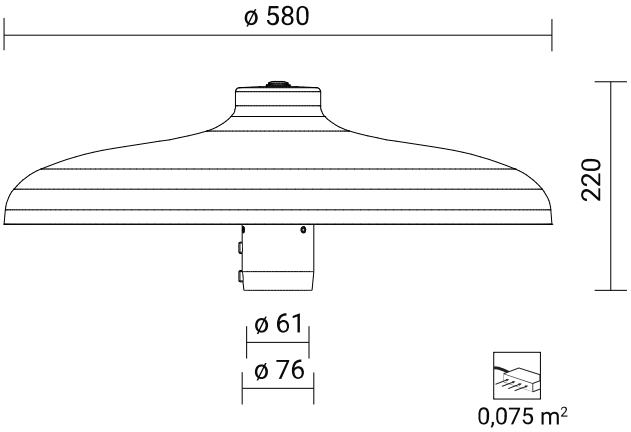

RING 2 LED 'B'

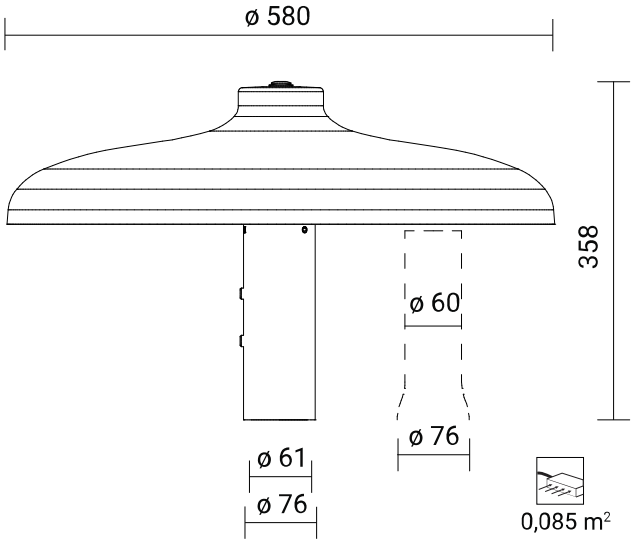

PHOTOMETRIC CURVES

T4

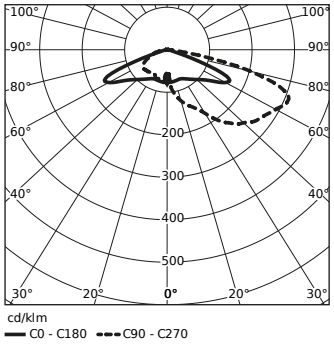

T4 - RING LED 72W

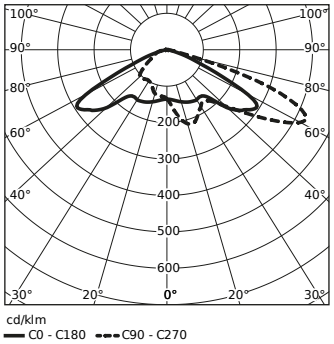

VS

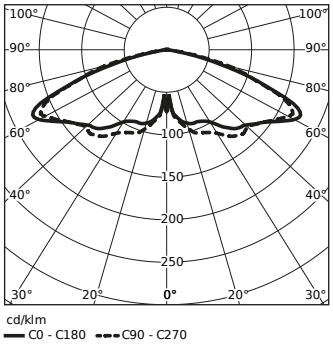

VS - RING LED 72W

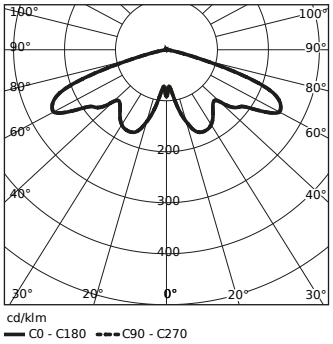

SP

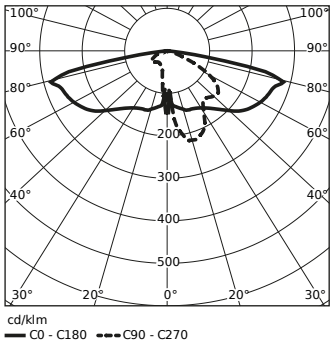

POWER SYSTEM FUNCTIONS

Luminaire in standard has following functions of intelligent power supply:

– Connection to outside control system by DALI interface (operation of analog signal 1-10V as an option),
– Possibility of programming multistage dimming of luminaire, up to 5 intervals in the range of from 10 to 100% of nominal power,
– Temperature protection of LED module (from overheating) in case of unintentional luminaire operation during the,
– Regulation of power / luminous flux – the option of setting another value than the catalogue in the range of 30-100% of nominal one,

Zakład Produkcji Sprzętu Oświetleniowego „ROSA” Sp. z o.o.
43-109 Tychy, ul. Strefowa 1 tel. +48 32 73 88 901
www.rosa.pl

RING 2 LED

ACCETABLE QUANTITY OF LUMINAIRES ON ONE CIRCUIT

Accetable quantity of luminaires RING 2 LED on one circuit, protected by:

Overcurrent switches MCB type B or C

Luminaire	Typ	2A	4A	6A	10A	16A	20A	25A
RING 2 LED	B	4	7	12	18	30	37	46
	C	4	12	18	31	51	62	78

Fuse – type gG and GL

Luminaire	2A	4A	6A	10A	16A	20A	25A
RING 2 LED	1	10	20	26	52	71	101

CHROMATICITY

Chromaticity	x	y
2700K	0,4582	0,4099
3500K	0,4080	0,3916
4000K	0,3825	0,3798
5000K	0,3451	0,3554

PHOTOMETRIC CODE

2700K	727/559
3500K	735/559
4000K	740/559
5000K	750/559

Zakład Produkcji Sprzętu Oświetleniowego „ROSA” Sp. z o.o.
43-109 Tychy, ul. Strefowa 1 tel. +48 32 73 88 901
www.rosa.pl